PRIME DESIGN™

A Safe Fleet Brand

CON-8006

Conduit Carrier – 12'

Dimensional Specifications on Pages 2-4

Configuration as shown:

US Gen1, US Gen4, AluRack
Finish: White Powder Coat
Consolidated Hardware Kit: CON-8505
Conduit Splice Assembly: ACC-8103
Accessory Weight (empty): 41.50 lbs

**CONSOLIDATED MOUNTING BRACKET KIT INCLUDED*

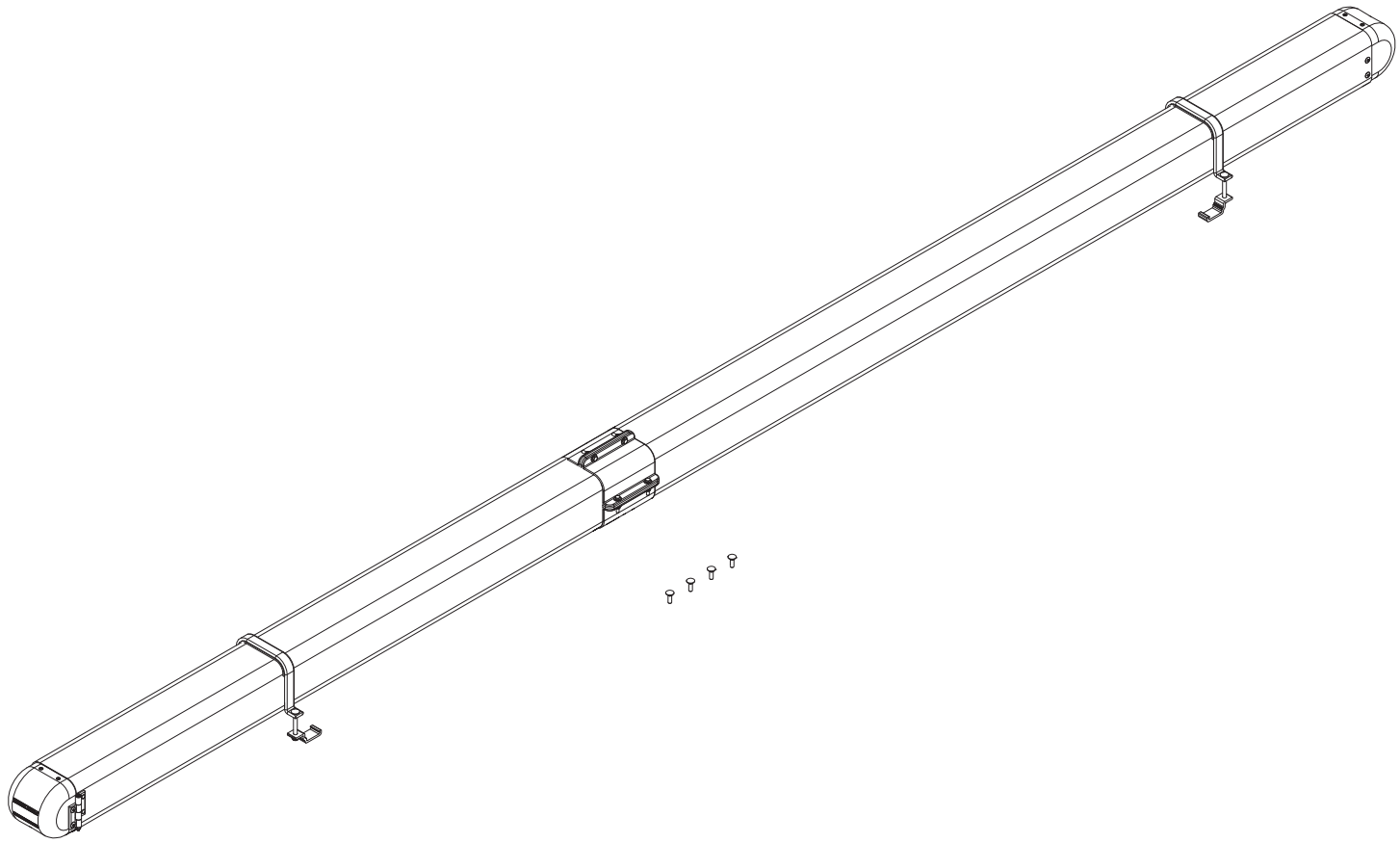

**Note: Includes Consolidated Mounting Bracket Kit to install onto Gen1, Gen4, and AluRack models*

1689 Oakdale Avenue #102, West St Paul, Minnesota 55118 • Phone: 651-552-8554 • 1.8.PRIME.RACK • Fax: 651-552-1799 • Email: info@primedesign.net • Website: www.primedesign.net
TM & © 2017 PRIME DESIGN • Protected by one or more of the following patent numbers: 6092974, 6764268, 6971563, 2364879, 8857689, 8511525, 8991889, and other patents pending

PRIME DESIGN™

A Safe Fleet Brand

CON-8006

Conduit Carrier–12′

Shown mounted onto Gen 4 (Ford Transit Van) Rack for illustrative purposes only

Approximate dimensions as shown:

A: Conduit Carrier Inside Width/Height ..... 5″
B: Conduit Carrier Outside Width..... 5.25″
C: Conduit Carrier Total Width ..... 8″
D: Conduit Carrier Total Length..... 153.75″
E: Conduit Carrier Usable Length ..... 147″
F: Front Conduit Splice Usable Length..... 64″
G: Rear Conduit Splice Usable Length..... 83″
H: Conduit Carrier Height ..... 5″
I: Mounting Bracket Maximum Width .....8′
J: Minimum Required Space.....9″

**Note: Includes Consolidated Mounting Bracket Kit to install onto Gen1, Gen4, and AluRack models*

**CONSOLIDATED MOUNTING BRACKET KIT INCLUDED*

If installing this Conduit Carrier Assembly onto a Rotation-Rotation rack configuration, a minimum of 9.00″ spacing between the ends of the Rotation Uppers is required.

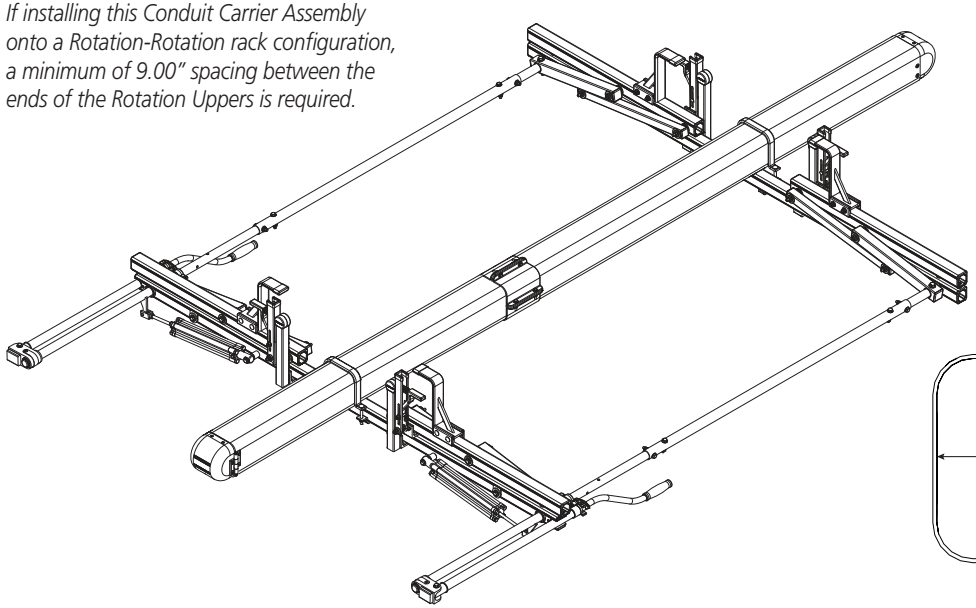

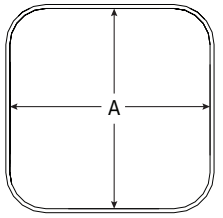

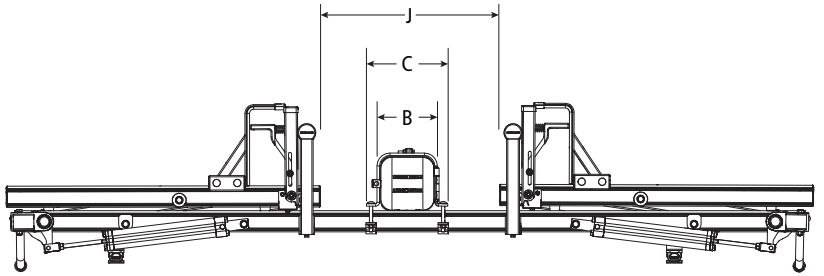

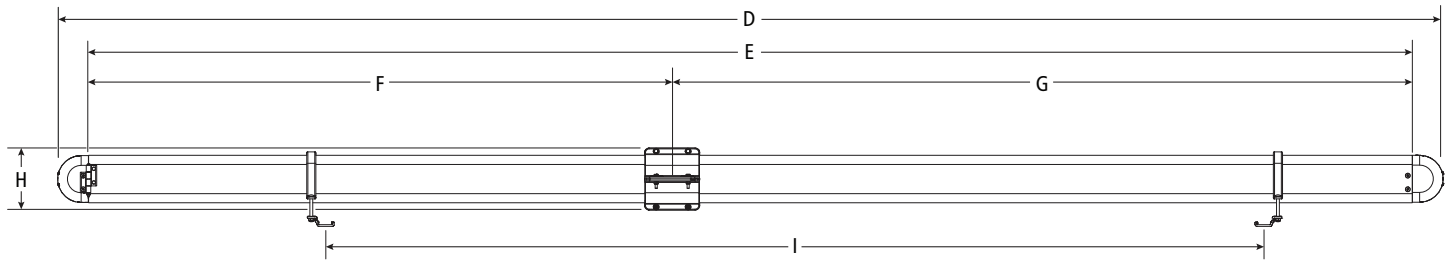

1689 Oakdale Avenue #102, West St Paul, Minnesota 55118 • Phone: 651-552-8554 • 1.8.PRIME.RACK • Fax: 651-552-1799 • Email: info@primedesign.net • Website: www.primedesign.net
TM & © 2017 PRIME DESIGN • Protected by one or more of the following patent numbers: 6092974, 6764268, 6971563, 2364879, 8857689, 8511525, 8991889, and other patents pending

USOV-CON8006-US01 Rev-A 0917

PRIME DESIGN™

A Safe Fleet Brand

CON-8006

Conduit Carrier–12'

Shown mounted onto Gen1 (GM Van) Rack for illustrative purposes only

Approximate dimensions as shown:

A: Conduit Carrier Inside Width/Height ..... 5"
B: Conduit Carrier Outside Width..... 5.25"
C: Conduit Carrier Total Width ..... 8"
D: Conduit Carrier Total Length..... 153.75"
E: Conduit Carrier Usable Length ..... 147"
F: Front Conduit Splice Usable Length ..... 64"
G: Rear Conduit Splice Usable Length ..... 83"
H: Conduit Carrier Height ..... 5"
I: Mounting Bracket Maximum Width .....8'
j: Minimum Required Space .....9"

Note: Includes Consolidated Mounting Bracket Kit to install onto Gen1, Gen4, and AluRack models

**CONSOLIDATED MOUNTING BRACKET KIT INCLUDED*

If installing this Conduit Carrier Assembly onto a Rotation-Rotation rack configuration, a minimum of 9.00" spacing between the ends of the Rotation Uppers is required.

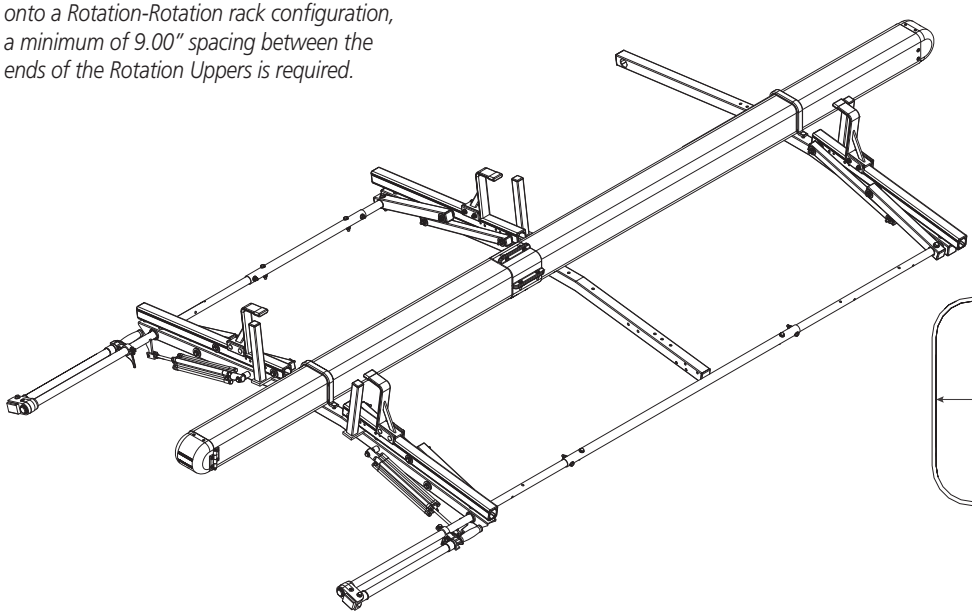

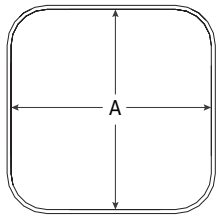

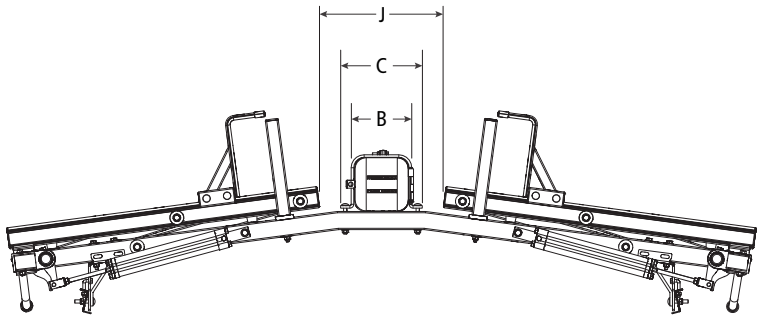

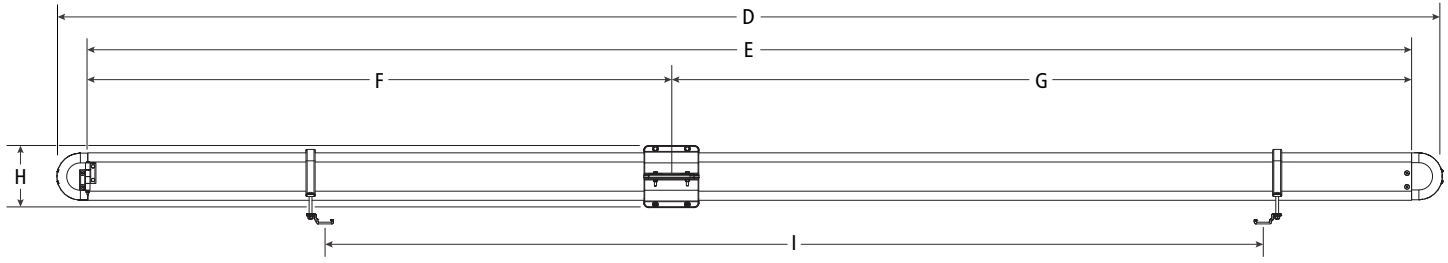

1689 Oakdale Avenue #102, West St Paul, Minnesota 55118 • Phone: 651-552-8554 • 1.8.PRIME.RACK • Fax: 651-552-1799 • Email: info@primedesign.net • Website: www.primedesign.net
TM & © 2017 PRIME DESIGN • Protected by one or more of the following patent numbers: 6092974, 6764268, 6971563, 2364879, 8857689, 8511525, 8991889, and other patents pending

USOV-CON8006-US01 Rev-A 0917

PRIME DESIGN™

A Safe Fleet Brand

CON-8006

Conduit Carrier–12′

Shown mounted onto AluRack for illustrative purposes only

Approximate dimensions as shown:

A: Conduit Carrier Inside Width/Height ..... 5″
B: Conduit Carrier Outside Width ..... 5.25″
C: Conduit Carrier Total Width ..... 8″
D: Conduit Carrier Total Length..... 153.75″
E: Conduit Carrier Usable Length ..... 147″
F: Front Conduit Splice Usable Length ..... 64″
G: Rear Conduit Splice Usable Length ..... 83″
H: Conduit Carrier Height ..... 5″
I: Mounting Bracket Maximum Width ..... 8′
J: Minimum Required Space ..... N/A

**Note: Includes Consolidated Mounting Bracket Kit to install onto Gen1, Gen4, and AluRack models*

Assembly Manual also available:

CON-8006

USOV-CON8006-US01 Rev-A 0917

**CONSOLIDATED MOUNTING BRACKET KIT INCLUDED*

If installing this Conduit Carrier Assembly onto a Rotation-Rotation rack configuration, a minimum of 9.00″ spacing between the ends of the Rotation Uppers is required.

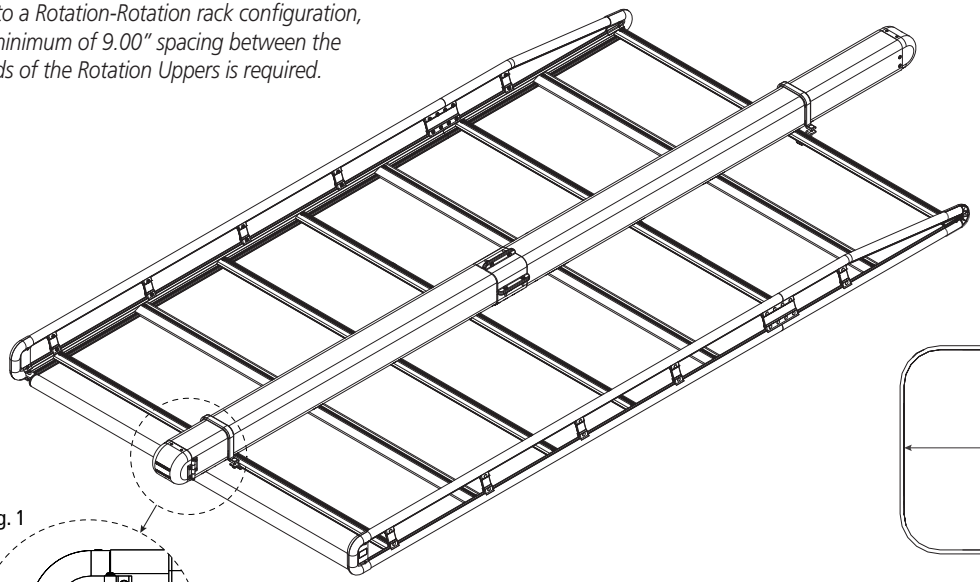

Fig. 1

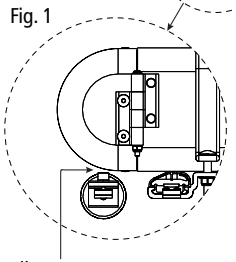

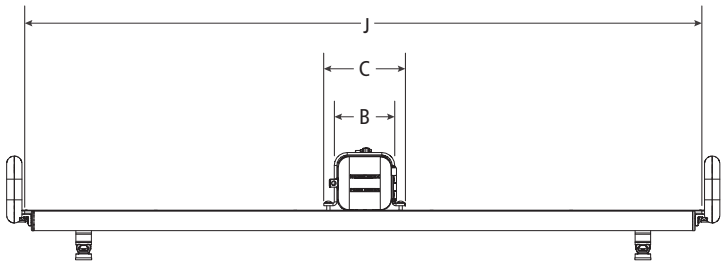

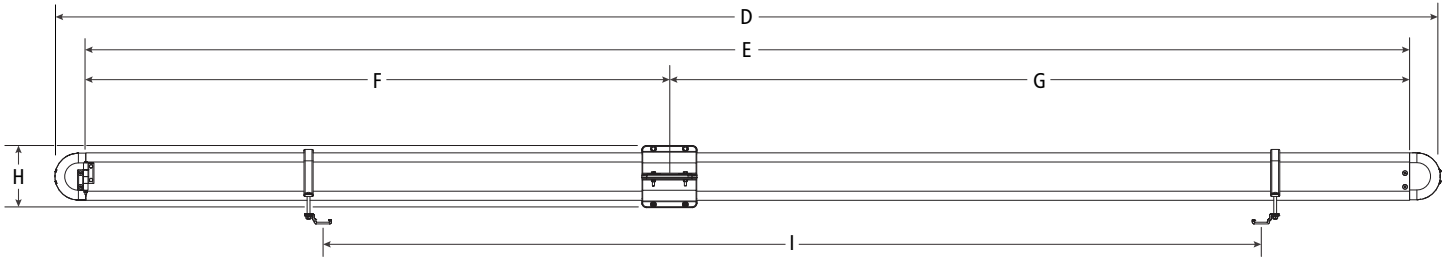

1689 Oakdale Avenue #102, West St Paul, Minnesota 55118 • Phone: 651-552-8554 • 1.8.PRIME.RACK • Fax: 651-552-1799 • Email: info@primedesign.net • Website: www.primedesign.net
TM & © 2017 PRIME DESIGN • Protected by one or more of the following patent numbers: 6092974, 6764268, 6971563, 2364879, 8857689, 8511525, 8991889, and other patents pending