LIGHTWEIGHT ECONOMY INTERLOCKING BARRIER - PRAIL-102-G-W

APPROX WEIGHT: 36 lbs.
DOES NOT INCLUDE WEIGHT OF POWER OR PACKAGING!!!

*** ANY ADDITIONS, DELETIONS, OR OMISSIONS MUST BE CORRECTED ON THIS DRAWING AS THIS DRAWING WILL BE CONSIDERED ALL INCLUSIVE ***
ALL GRAPHICS PROVIDED ARE FOR REFERENCE ONLY. IF CERTAIN DIMENSIONS ARE CRITICAL PLEASE VERIFY THOSE DIMENSIONS WITH YOUR SALESPERSON

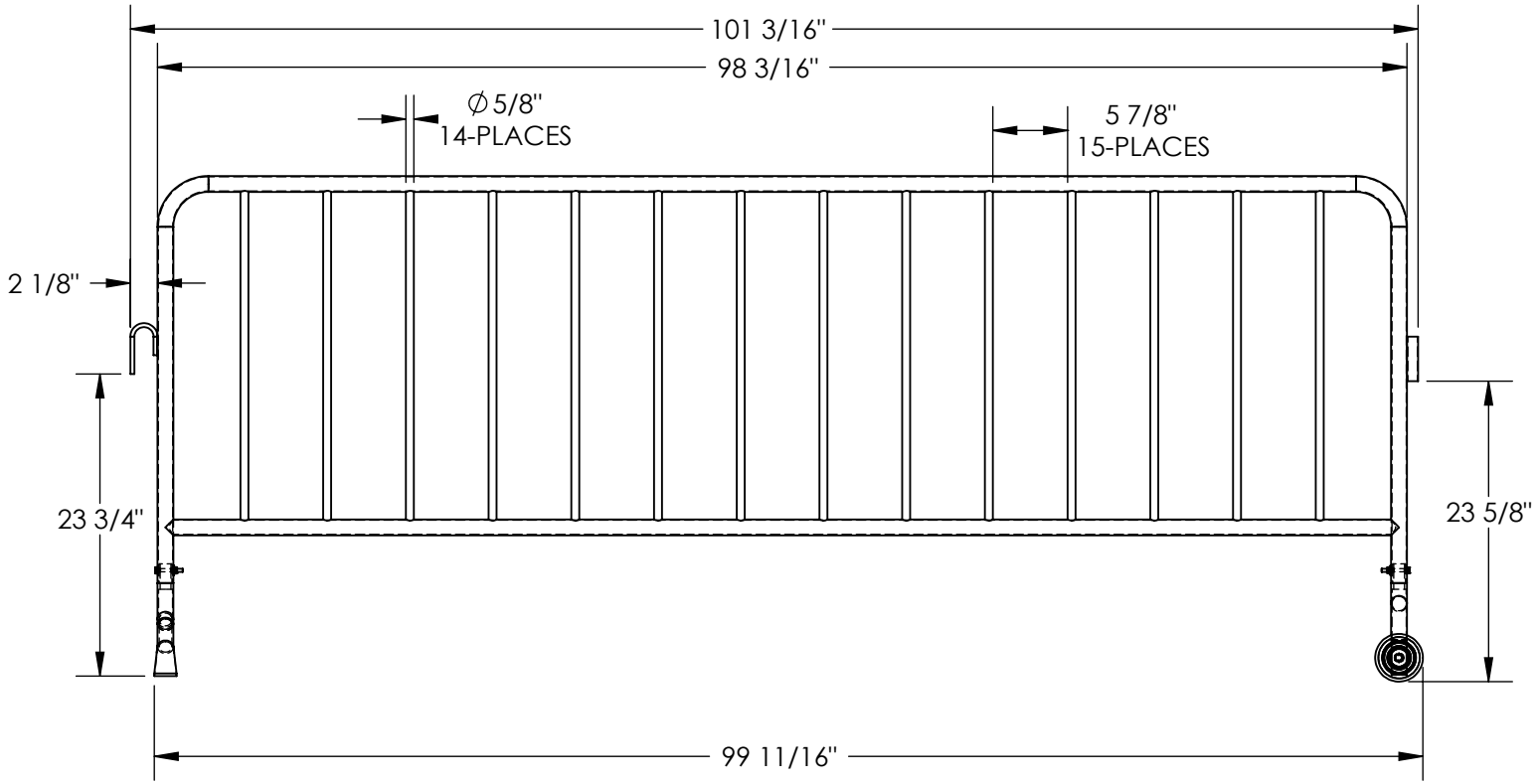

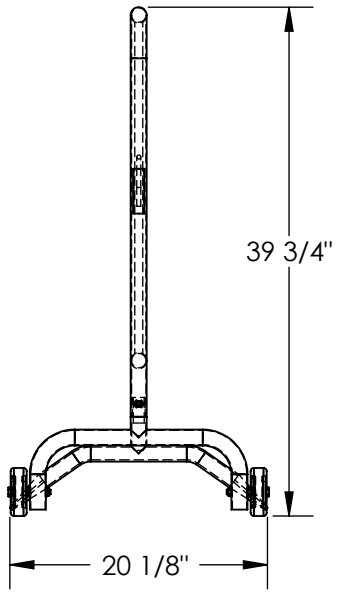

DIMENSION TOLERANCE ± 1/2"

STANDARD FEATURES

MODEL NUMBER IS PRAIL-102-G-W
OVERALL WIDTH IS: 20 1/8"
OVERALL LENGTH IS:101 3/16"
OVERALL HEIGHT IS: 39 3/4"
DISTANCE BETWEEN VERTICAL BARS IS: 5 7/8"
INCLUDES CONNECTORS TO ATTACH MULTIPLE UNITS TOGETHER
INCLUDES ONE CURVED FOOT AND ONE WHEELED FOOT
FEET ARE REMOVABLE FOR STORAGE AND SHIPPING
BRIGHT ZINC FINISH

SPECIAL FEATURES

NONE

APPROVAL

I, THE UNDERSIGNED, AGREE THAT THE PRODUCT AS REPRESENTED SATISFIES DESIGN AND DIMENSION REQUIREMENTS. I ALSO ACKNOWLEDGE MY DUTY TO CONFIRM PRODUCT AND INSTALLATION COMPLIANCE WITH ALL APPLICABLE FEDERAL, STATE AND LOCAL REGULATIONS AND STANDARDS.

ANY MODIFIED UNITS ARE NON-RETURNABLE

[ ] As drawn [ ] As marked

Signed:_____ Date:_____

Printed Name:_____

LEAD TIME WILL START UPON RECEIPT OF SIGNED APPROVAL DRAWING

FOR INTERNAL USE ONLY PROJECT SIGN OFF	
SALES	
ENG.	
FAB.	
POWER	

DISTRIBUTOR'S NAME: VESTIL MANUFACTURING			P.O.# X
			W.O.# X
DRAWN BY: T. MOORE	DATE: 05/26/10		SALES: X
REFERENCE: X		SCALE: 1:15	FILE NAME: 23-007-357
QUOTED LEAD TIME: X	QUOTE # X		